DO NOT SCALE – USE DIMENSIONS ONLY	"NF"/B.O. INDICATES NOT FURNISHED BY CB NB
DO NOT USE FOR CONSTRUCTION UNLESS APPROVED BELOW	

THIS DRAWING IS THE PROPERTY OF CB NEBRASKA BOILER AND IS LOANED ON CONDITION THAT IT SHALL NOT BE COPIED OR REPRODUCED IN WHOLE OR IN PART OR DISCLOSED TO ANY THIRD PARTY OR USED IN ANY WAY WITHOUT THE WRITTEN CONSENT OF CB NEBRASKA BOILER. ANY EQUIPMENT OR MATERIAL SHOWN, BUT NOT FURNISHED BY CB NEBRASKA BOILER, IS FOR ILLUSTRATING THE APPLICATION, AND CB NEBRASKA BOILER ACCEPTS NO RESPONSIBILITY AS TO INSTALLATION OR OPERATION OF SUCH EQUIPMENT OR MATERIALS.

REV.	DATE	DESCRIPTION	DWN	CKD	APPR

NOTES:

1. DRAWING IS FOR OVERALL SIZE AND ARRANGEMENT ONLY. REFER TO PROPOSAL FOR TRIM LIST.
2. THIS DRAWING IS NOT TO BE USED FOR CONSTRUCTION PURPOSES.
3. FEEDWATER SIZING AND LOCATIONS OF VALVES AND PIPING IS A REPRESENTATION ONLY, AND IS USED TO SHOW AN EASILY VISIBLE PICTORIAL VIEW..
4. * – DENOTES TO BE DETERMINED.

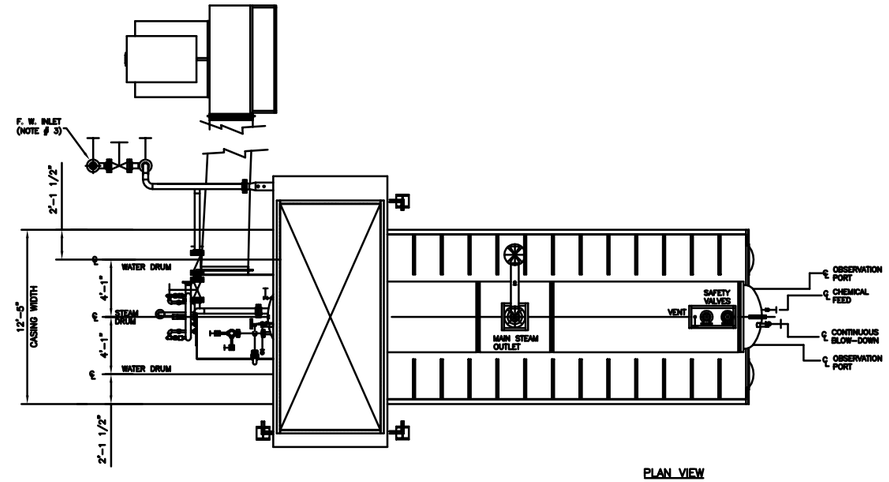

PLAN VIEW

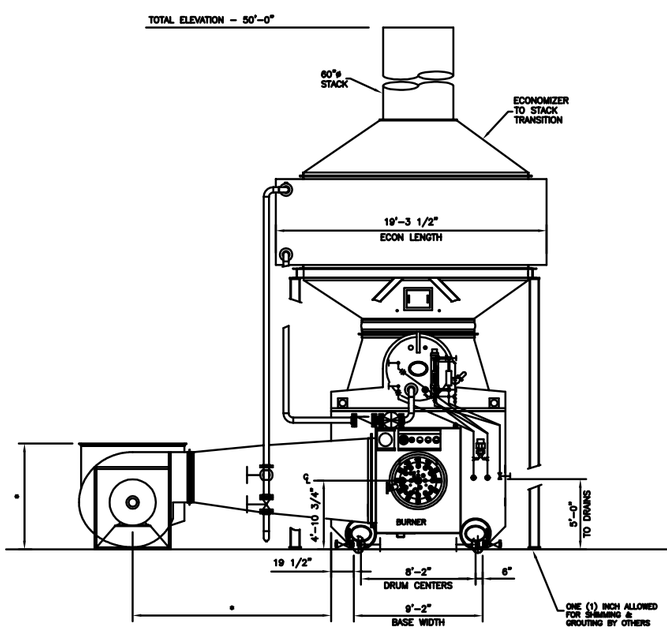

BURNER
END VIEW

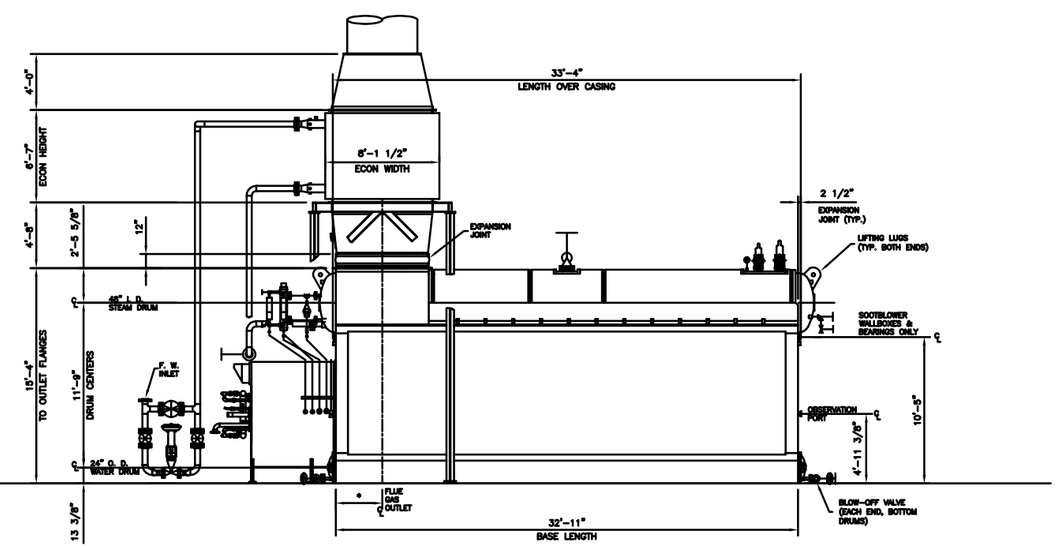

SIDE VIEW

CB NEBRASKA BOILER®
The power of commitment.™

GENERAL ARRANGEMENT SERIES:
N2S–7/S–95 W/ECON (HM)

LAYOUT DRAWING FOR
150,000 LB./HR.

SCALE: NONE	DATE: MAY 03, 2007
DRAWN BY: KENB	CHECKED:
JOB NO: PROPOSAL	SERIAL NO:
QTY:	DRAWING NO: N2S–7S–95

ISSUE